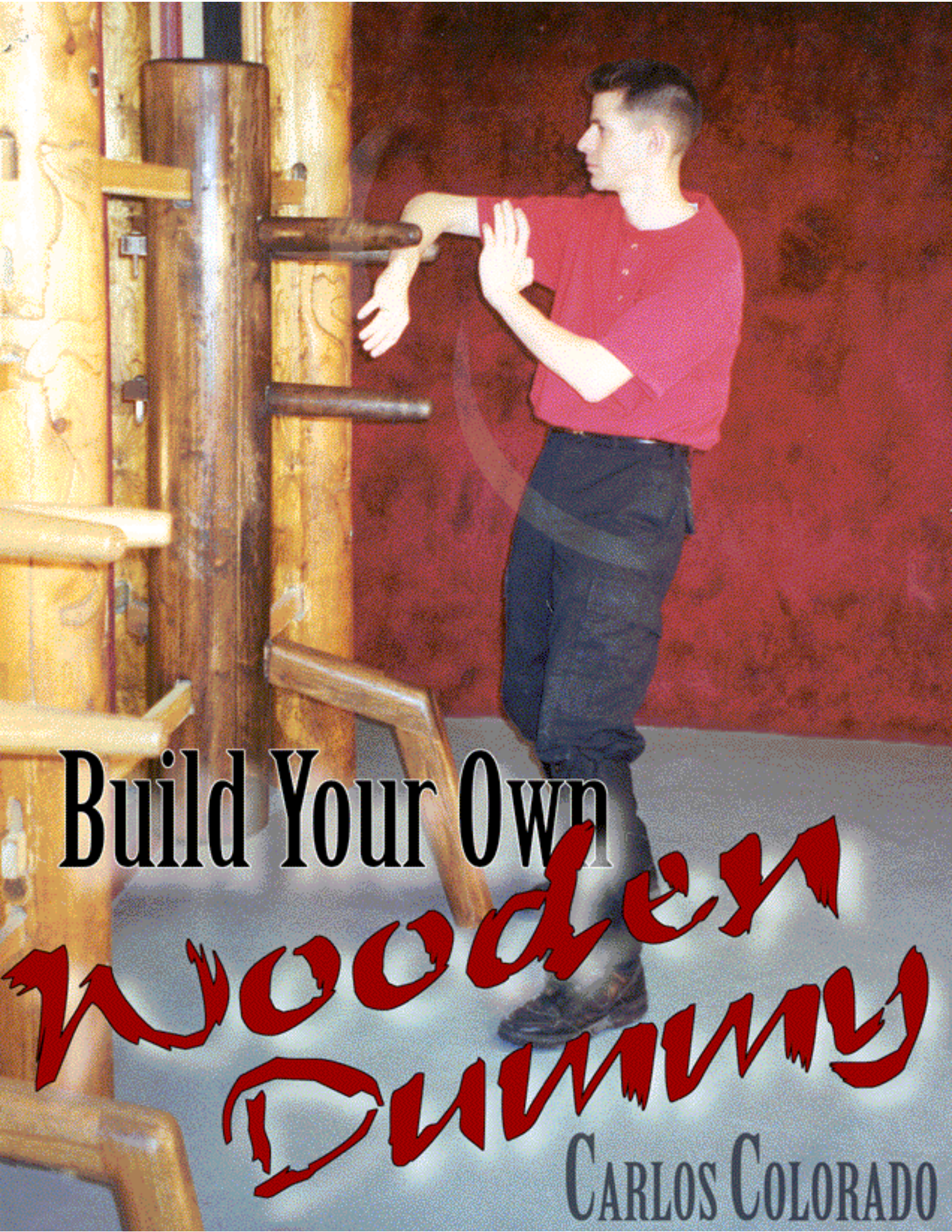
Build Your Own
Wooden Dummy
Carlos Colorado

Build Your Own Wooden Dummy

Carlos Colorado

Wing Chun Kung Fu Council

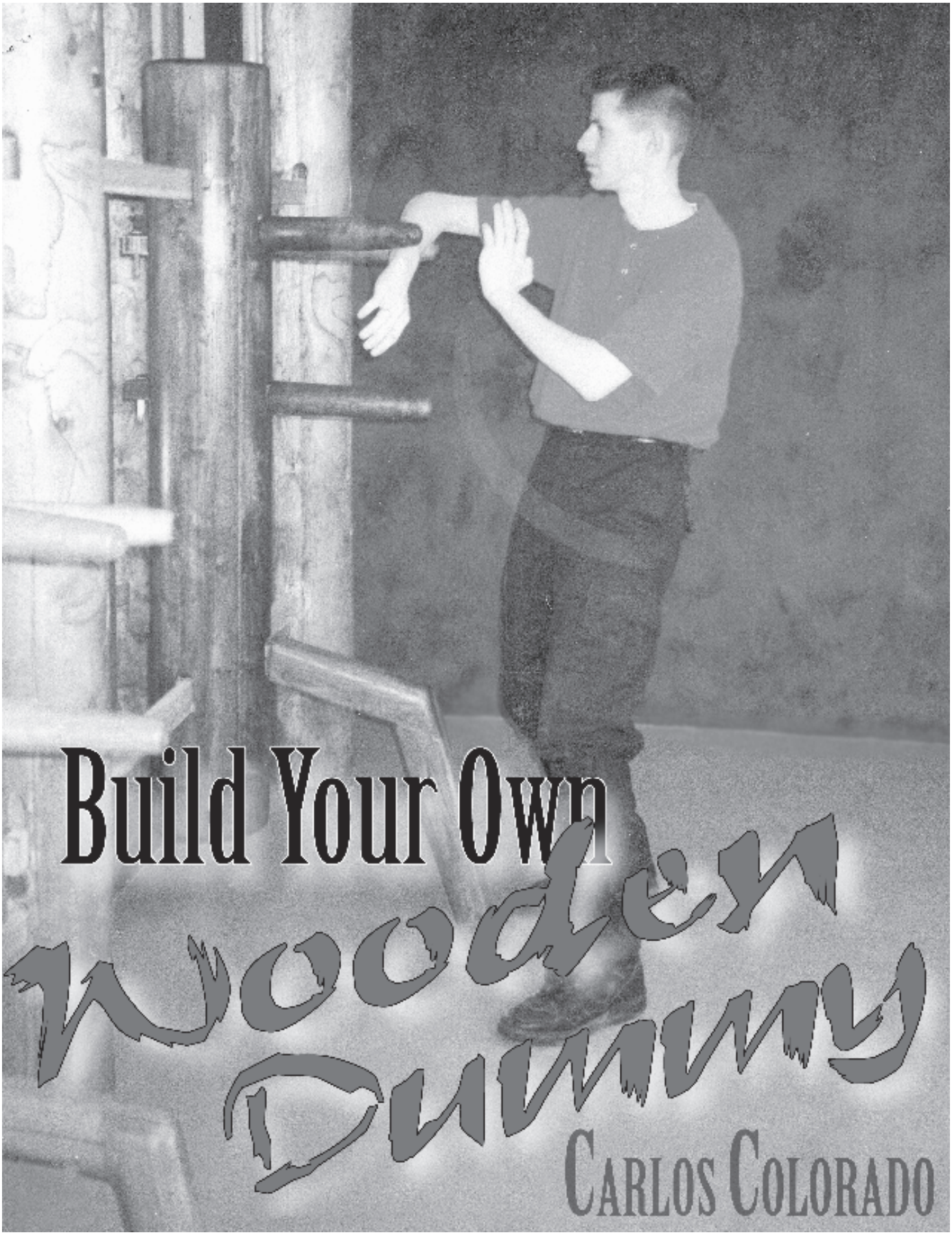

Build Your Own Wooden Dummy

Carlos Colorado

Copyright (C) 2001 WCKFC
www.wckfc.com
All Rights Reserved

No part of this book may be reproduced in any form whatsoever, whether by graphic, visual, electronic, film, microfilm, tape recording, or any other means, without prior written permission of the author, except in the case of brief passages embodied in critical reviews and articles.

Published by Wing Chun Kung Fu Council in cooperation with Grandmaster Ip Ching

Distributed by:
WCKFC
545 E. Tabernacle
St George Ut 84770
www.wckfc.com

Printed in the United States of America

CONTENTS

About The Dummy _____ 9

Selecting The Proper Wood _____ 11

Building The Body _____ 12

Building The Arms _____ 23

Building The Leg _____ 26

Particulars Of A Proper Dummy _____ 29

Finishing The Dummy _____ 31

Setting Up The Dummy _____ 32

The Measurements _____ 34

introduction

ABOUT THE WOODEN DUMMY

The Mook Yan Jong is, in many ways, the trademark of Wing Chun training. It is a vital key of a practitioner's skill. In order to properly train and become proficient, one must have a wooden dummy that properly represents correct lines of force, and that has the correct amount of spring. There are several ways to make a Mook Yan Jong. These instructions assume that you already have some proficiency in using tools, and working wood. Please read the instructions in their entirety before you start making your wooden dummy, so that you may have a basic idea of all that is involved. As always, remember to use common sense, and be conscientious of safety measures; wear safety glasses, etc.

Following these instructions will leave you with a beautiful and functional, heirloom quality wooden dummy. And it will provide you the correct angles, as taught by Ip Man, through his son Ip Ching.

chapter one

SELECTING THE PROPER WOOD

The first step in building a good wooden dummy is selecting a wood that is both functional, and beautiful. It must meet the required measurements.

In choosing a piece for the body, one has different options. One may decide to use a natural log from a variety of trees, or perhaps a laminated and milled "log" from the wood of choice. Most practitioners choose to use hardwood, however, experience shows that a lodge pole (pine) log, which is more readily available, will hold up excellently against years of use; many hesitate to use a pine log because of the inevitable checks and cracks on the wood. Although it is important to find a log without excessive cracks that might distort the angles on the dummy, the checks on a thoroughly cured log do not affect the function of the dummy. Some even like the look of wood better with a few cracks to add character. One always has the option of filling in the cracks with wood putty if the cracks are thought of as an eyesore. Opting for pine rather than hardwood will make the project all the more affordable, if that is a concern.

As for the limbs and crosspieces, the wood must be a hardwood, for example, oak, teak, maple, etc.

chapter 2

BUILDING THE BODY

This is a must so that your dummy can withstand the tremendous amount of power and impact that it will recieve.

The first step to building the body of the Jong is to cut the log to the desired length. The neater the cut, the less one will need to sand at the end of the project. Be sure to also choose the face or front of the body, taking into account the amount and size of checks running through it.

The next step is to mark a vertical midline down the front of the body, then a line on the top end of the dummy that extends from the first line, through the core line of the body, all the way to the back.

Using these lines as the main guides, draw where the holes for the three arms and the leg will be, as shown on the plans.

A very suitable angle is achieved if when marking off the top two arm holes, one allows there to be a 3/16″ gap between the inside of the hole, and the vertical midline of the dummy, or a 3/8″ gap between the holes. This is a suggestion that will greatly improve the usefulness of the dummy.

Note from the plans at the back of this book that the two top armholes must cross the transverse plane seen on the top of the dummy. It is crucial to not make these two holes parallel to each other. Follow the next steps carefully in order to avoid such a mistake.

Lay the body horizontally. It is important whenever drilling a hole, to be sure that the body is level.

Center the topmost armhole when seen from above. Do NOT place the dummy with the vertical midline in the center when seen from above, offsetting one armhole to each side of the center of the body, as shown in this photo.

Using a long 1-1/2″ boring bit, drill a pilot hole, which will be the center of the armhole, for the first and topmost arm all the way through the dummy. Such a bit will produce a nice, clean, and straight hole; and it will save you much chiseling, but if a bit that size is unavailable, you may use one of a smaller diameter.

Next, Begin to carefully chisel the square shape of the hole and continue chiseling down all the way through the body.

Great care must be taken while chiseling, in order to keep the hole from wandering off from where it should be.

If very long chisels are unavailable, you'll have to draw the shape of the hole on the back of the dummy. Use the pilot hole that you drilled, to determine the exact position of the hole, and once you've cut in as far as your chisel will take you, start the same process from the back of the dummy. Your two holes, pertaining to the same arm, should meet in the middle.

Once you've completed the first and topmost armhole, rotate the dummy, centering the hole for the second arm. Follow the procedure as you did for the top armhole.

Be aware that since there is no distance between the bottom of the first armhole, and the top of the second, the two holes will literally meet in the middle of the dummy, creating a diamond shaped passage from one hole to the other.

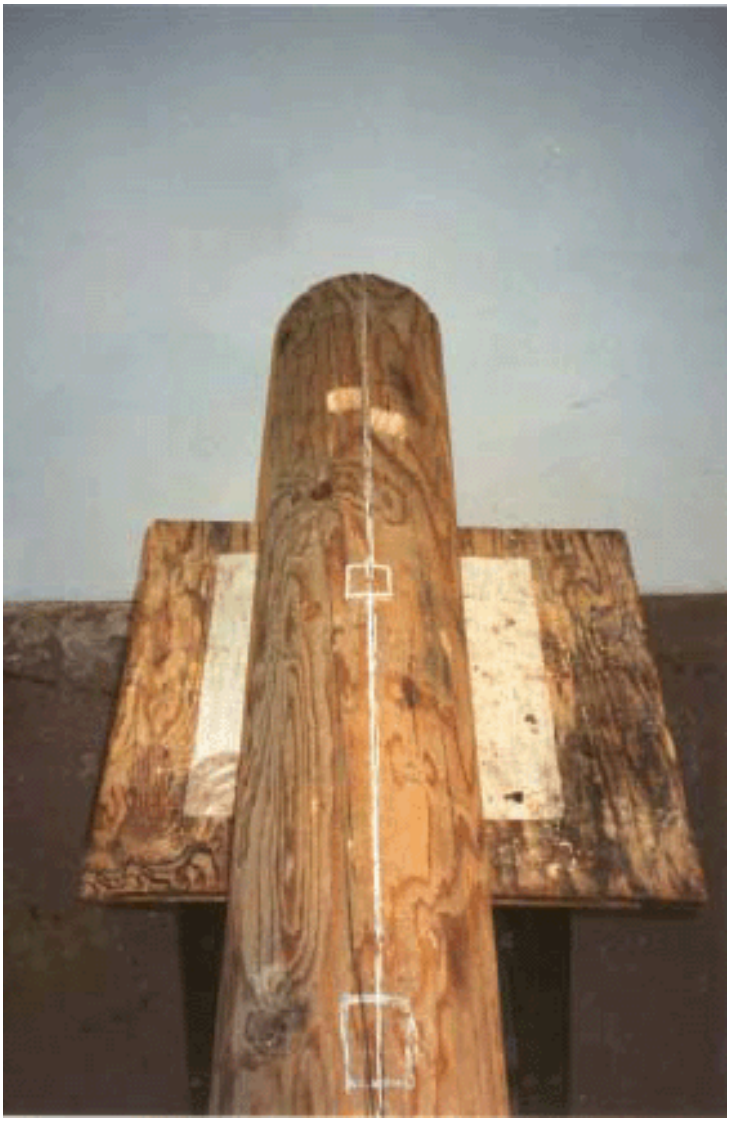

Repeat the process for the last armhole in the same way as the two previous **steps.**

The hole for the leg on the Mook Yan Jong, must be slanted at a 14° slope. To achieve this, your pilot hole must be made using a wooden guide. One can easily be made by drilling a hole with the boring bit into the end of a 3″x 2″x 2″ block of wood.

Then, using a miter saw, cut off both ends of the block at the prescribed 14° angle.

Now place the guide on the log as shown and commence drilling your pilot hole. Once you've drilled a couple of inches into the body of the Jong, you may set aside the guide. At this point, the first couple of inches on your hole will serve as a guide as you drill the rest of the leg hole. If your boring bit is of a small diameter, you may wish to drill a couple of pilot holes.

With a pilot hole drilled, chiseling out the rest of the hole is much like chiseling the armholes, except one must be careful to create this hole with the 14° angle. The wooden guide you created is useful in this process. Use the guide by laying it on the surface of the body, at the top of the leg hole and begin chiseling out the hole.

Then move the guide to the bottom of the hole and use the back edge of the guide, begin chiseling out the bottom of the leg hole. This process will help you start the leg hole at the correct angle.

With the holes for the limbs in place, one is ready to make the holes for the crosspieces that will hold up the Mook Yan Jong.

First draw a line perpendicular to the line you've drawn on the top of the body. Then extend this line down the side of the body.

Mark the holes as shown on the plans at the back of this book. Be sure that the holes are off centered and toward the back of the dummy. You cannot, however, use a 1-1/2" boring bit. You'll have to go with a smaller one. Drill a pilot hole and chisel out the corners as you did with all the previous holes.

A common concern for people who own a Mook Yan Jong, is finding a way to anchor it, so that it does not slide from side to side on the crossbeams. Some use blocks of wood on either side of the body to keep it in place. A simple and more cosmetically pleasing way is to insert a couple of dowels on the back of the body, that will fit into notches cut out of the crossbeams. On the plans for the back view of the body, you will see two holes; one is found slightly over 7″ down from the top, and the other one a little over 43″. Use a 5/8′ boring bit, and drill only halfway through the dummy. As you drill in, if you look into the side hole for the crosspiece, you should see about half of your dowel hole is invading the hole for the crosspiece. Then, insert and glue a 5/8″ dowel into the hole you drilled, use a coping saw to cut off the excess, so that the dowel is flush with the body. The process is the same for the bottom dowel hole.

You are now just about finished building the body, and the only thing left to do is to use a router to round off the edges on the top and the bottom of the dummy. Sanding them down instead works just as well, but it takes somewhat longer.

chapter 3

BUILDING THE ARMS

When it comes to building the limbs for a Mook Yan Jong, here are some things to consider. A lathe is by far the simplest way to make an arm. Without a lathe one has to carve out the round arms with a plane or by some similar method. It proves extremely difficult, and usually ineffective. If a lathe is not available, or, if you feel unskilled in the use of one, a simple solution is to find a good cabinetmaker in your area, and showing him the plans for the limbs, ask him to produce a set for you. He will be able to quickly do all the work on the arms and leg, and hand them to you ready for you to do the finishing work. Many times, this is the sensible thing to do. If you, however, have a lathe, you may follow the instructions on how to build the limbs. Keep in mind that the guidelines given are somewhat vague because making the limbs is more an art than a science.

First:
Laminate hardwood boards together and create three, 2-1/2″x2-1/2″x 2′ blocks of wood. Next, carefully find the center on each end of your boards, by tracing two diagonal lines from corners to corners that intersect in the middle.

Mount the arm on the lathe, and make a mark ½″ from the end. Then from there, measure 11-3/4″ and make a mark. The surface between the two marks will be where the taper is. Start to turn the wood on the lathe until it is round and of a 2-1/2″ diameter. Be sure to only round out half of the block of wood, and leave the other half square.

It is now time to create a taper. Follow the plans at the back of this book for the correct measurements as you cut.

Stop often and check your progress by measuring the diameter with calipers. When the lathe work is finished, take the arm and cut off the excess wood on the tapered side.

Repeat this process for the other two arms.

To cut the square shank of the arms, use a good, sturdy band saw. You may also use a handsaw, or jigsaw if you prefer. As the plans indicate, two of the arms must have the shank cut "*off-centered*", and one "*centered*." Keep that in mind as you cut.

Wait to drill the peg holes on the arms until after you have inserted the arms into their place in the body and decided where the holes should be (see Section IV), then drill the holes, and cut off the excess wood on the end of the shank. Make pegs by carving them out of a dowel.

chapter 4

BUILDING THE LEG

Legs have been made by many methods. Some have used biscuits, dowels, and other means to create a strong joint at the correct angle. Experience has shown the following to be a simple way to create a solid joint on a leg. Please study this section carefully, especially the photos, in order to understand the process.

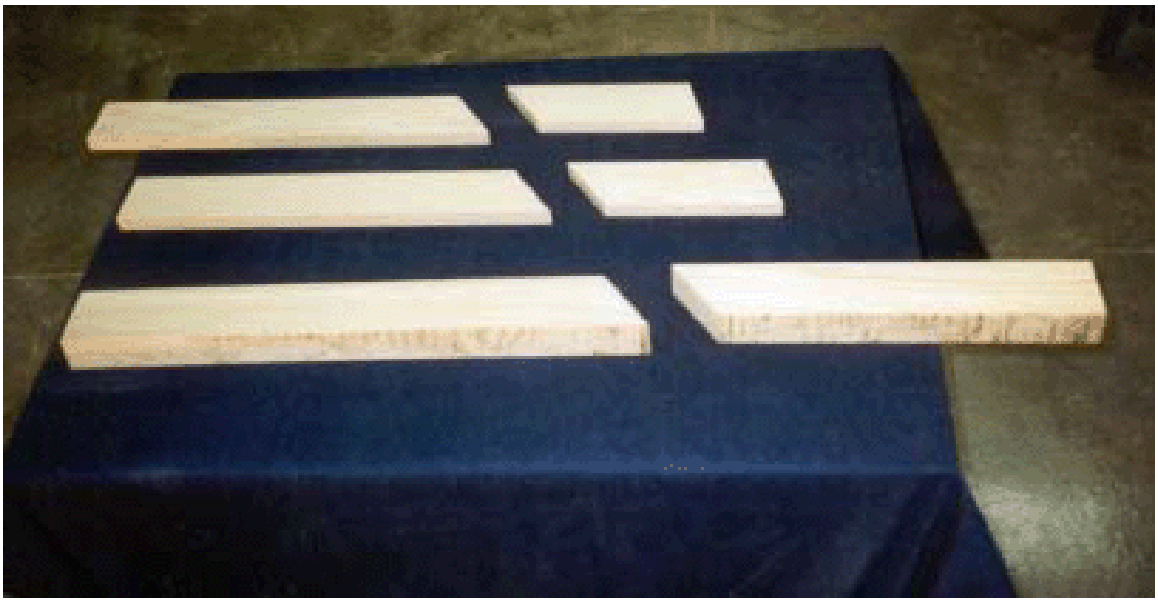

Start with two ¾″ thick boards, and a 1 ½″ board. The thicker board will also be longer. Refer to the plans to determine the length of the boards. Cut them at a 45° angle.

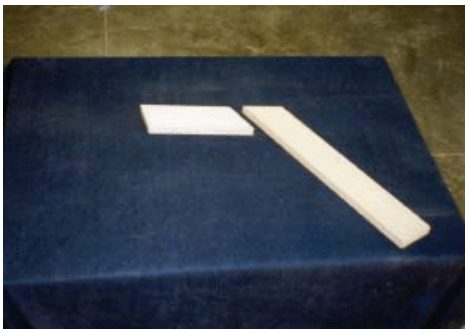

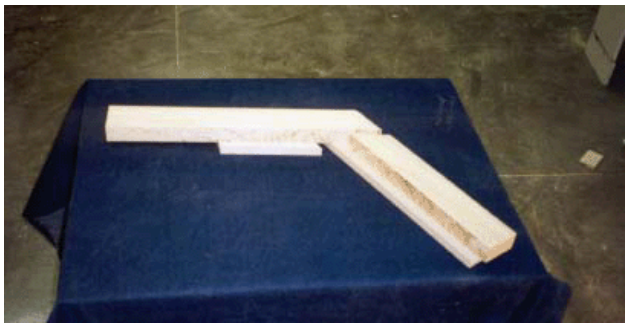

Now assemble the leg pieces into place. When done correctly, you will have the leg in its entirety placed together without glue as shown below.

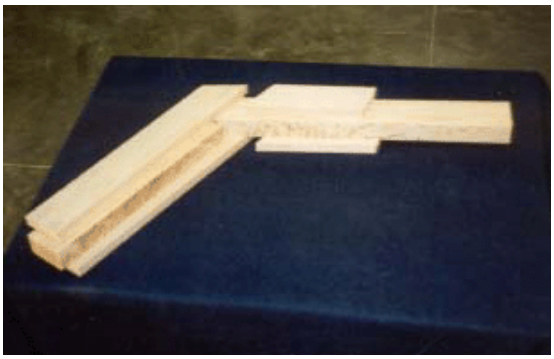

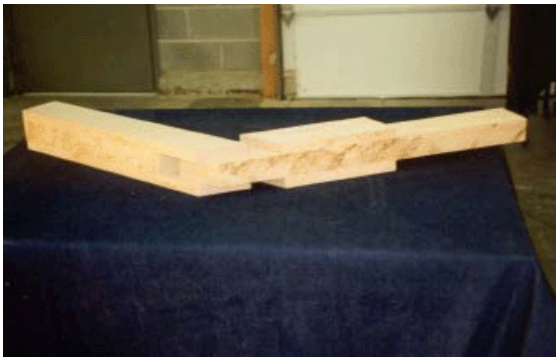

The two above photos show different views of how the joint will come together. The photos show a disjointed fit, in order to illustrate the individual board. Note that the boards alternate at the joint. This layering process can just as easily be done in four layers if using only ¾″ thick boards, just keep consistent with the concept of layering the leg.

The photo at the left illustrates the leg and how it comes together. All that has to happen now is to slidethe two lower outside pieces up into place

Next, simply laminate the leg in the configuration as shown on the pictures. Use plenty of wood glue and camp the leg tightly. Let dry the entire assembly dry completely.

Cut the shank of the leg on a band saw, as done for the shanks of the arms, so that it fits into the leg hole on the body. Remember to allow for some play between the shank and the hole.

The leg can now be shaped according to preference. A simple pass of a router on the sharp, 90° angles, will give the leg the rounded feel that it should have. However, you may choose to further round out the leg to give it a softer, more cylindrical look. It will make for a better looking and better feeling dummy. To do this, use a hand plane or a belt sander, and simply take off as much material as desired. Sculpt the leg.

Wait to drill the peg hole on the back side of the leg until after you have inserted the leg into the hole in the dummy. Now decided where the hole should be. Next, drill the hole and carve a peg out of a dowel.

chapter 5

PARTICULARS OF A PROPER DUMMY

There are some important and critical points to having a Mook Yan Jong with correct lines and a correct feel. One such point is that the two top arms must be placed in the dummy in a certain way, they must hang level. Uneven arms will distort the practitioner's skill in responding to different lines of force.

To assure that the two arms are level, one must insert the arms so that they are upside down from each other.

Notice that the 2-1/2″ diameter on the top two arms prevents them from being inserted all the way in. It seems as though the holes were too close together. That is not the case. It is necessary to sand some excess material off where the arms meet, so that they fit in the holes at the same time, and so that there is some play between them.

It is an important detail to know that there must be a certain amount of play on the arms and leg. One must not drill the peg holes on the back of the arms and the leg too close to the body of the dummy. Allow some room, so that there is a certain amount of play. Notice on the photo the gap between the thick part of the arm and the body.

As shown on the plans, the crosspieces must be 1″ thick. This is important. Often one will buy a 1″x 2″ board at the store, and notice that it does not truly meet those measurements. To go any less that a 1″ thickness will make the feel of the Mook Yan Jong too flimsy. It will move too much. Be sure to cut a half circle notch of 5/8″ with a coping saw at the middle of the crosspieces.

chapter 6

FINISHING THE DUMMY

At this stage, one is ready to do the delicate finishing work on the dummy. If you have decided to conceal the checks on the body, fill them in using good wood putty and letting it dry.

Now one must thoroughly sand the body and all of the limbs. Hand sanding is fine, but using an electric palm sander will get the job done much more quickly. Remember to always sand with the grain. Start by using 80-grit sandpaper until you have a nice surface. Move on up to about 120-grit to prepare the dummy for the actual finishing stage.

Choose whether you want to stain your dummy with a specific color, or if you prefer to leave the natural look of the wood. The choice is yours. Any stain will do nicely if that's the rout you take. Apply the stain as directed by the manufacturer.

Many finishes are used for wooden dummies. Some people prefer to use a lacquer, or just regular furniture oil such as Old English or linseed oil. Experience has shown that the best finish for the Mook Yan Jong is Tung Oil. Tung Oil is rather inexpensive and readily available. It strengthens and nourishes the wood and conditions the fibers, making the dummy last a lifetime. Freely apply the Tung Oil according to the instructions on the container. Apply three or four coats to your Jong before you start to use it. Thereafter continue applying Tung Oil weekly or monthly. One cannot overdo the number of coats of Tung Oil.

chapter 7

SETTING UP THE DUMMY

Individual needs will dictate much of the setup used for the dummy. Some need a portable stand, while others have limited space to work out in. People will need to determine what sort of setup will best suit their situation. It is recommended, whenever possible, that the structure that holds the crossbeams be lagged permanently on to the wall. Having the Mook Yan Jong completely stationary is best, and often unachieved with portable stands, which move when one applies power to the wooden dummy.

A few guidelines must be followed in order to properly set up the dummy. It is the practitioner's height that will determine how high to mount the dummy. When the practitioner is in a proper Wing Chun stance, his navel should be around level with the bottom, or center arm of the wooden dummy.

Also, this should provide a good level for a proper bong sau, with the bridge of the hand making contact with the top arm and the practitioners upper arm nearly parallel to the ground.

Remember, making a Mook Yan Jong is more an art than a science. Put your heart into your work, and you'll not be disappointed. These instructions, if closely followed will leave you with a wooden dummy to last you a lifetime.

chapter 7

THE MEASURMENTS

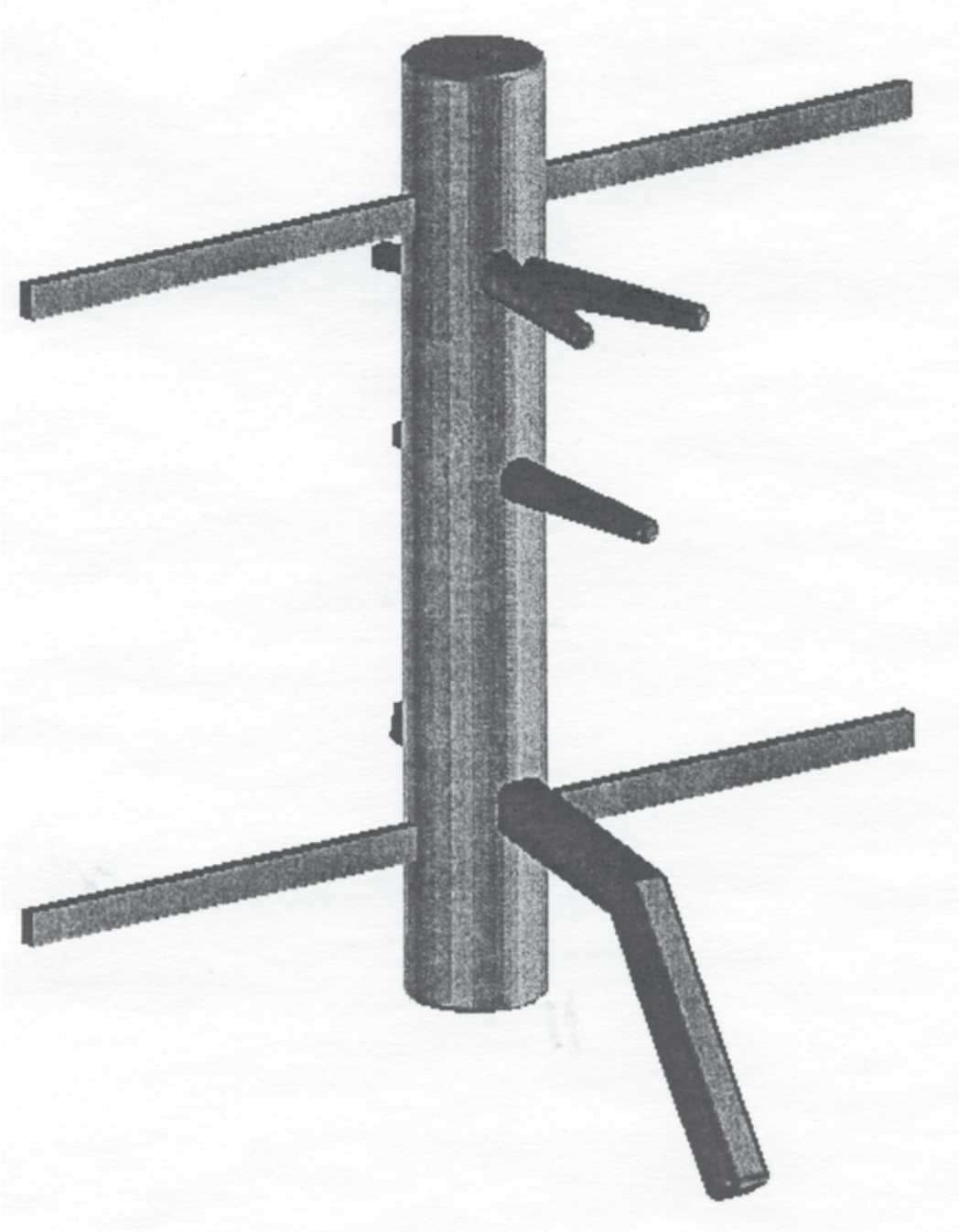

The Dummy Body Front View

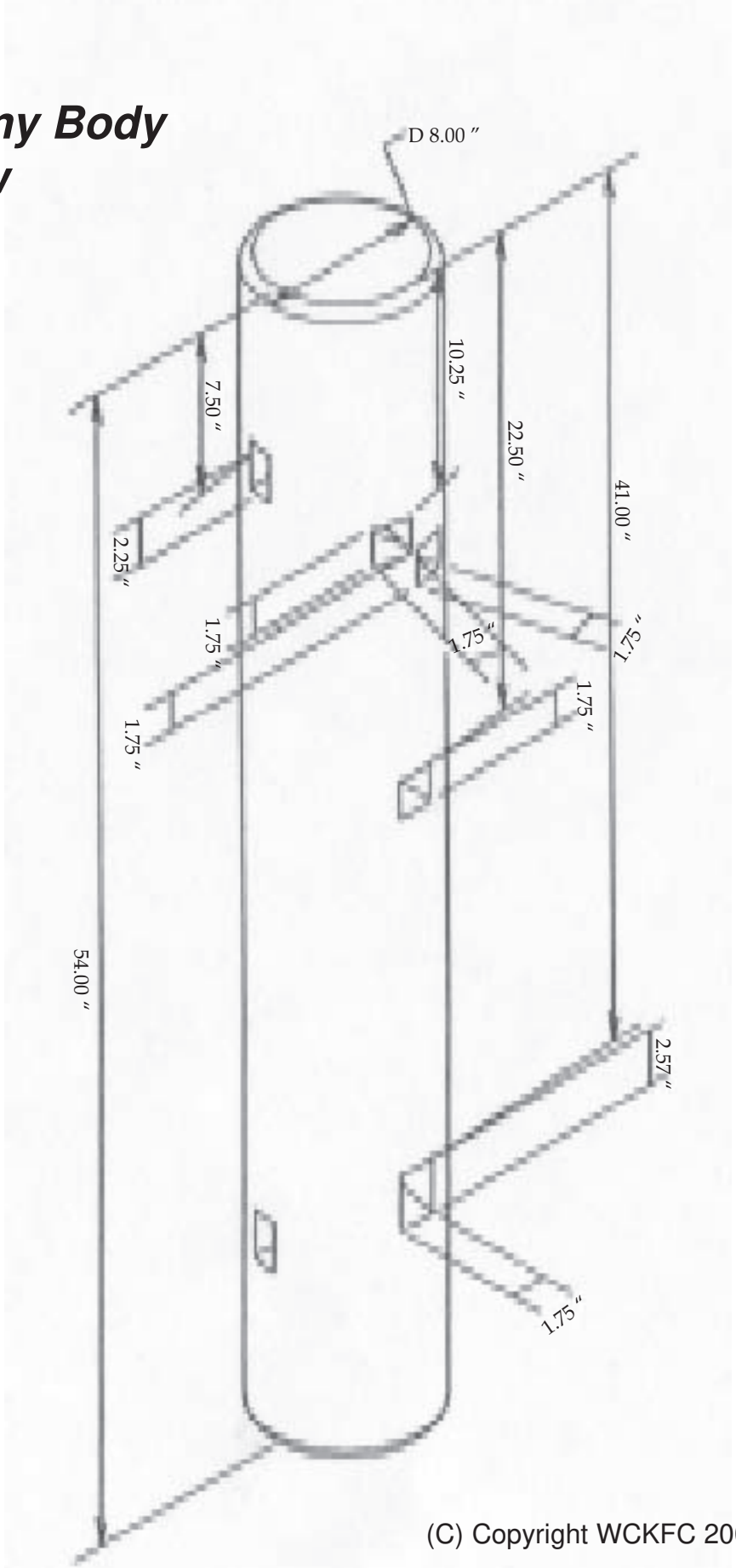

(C) Copyright WCKFC 2001

The Dummy Body Back View

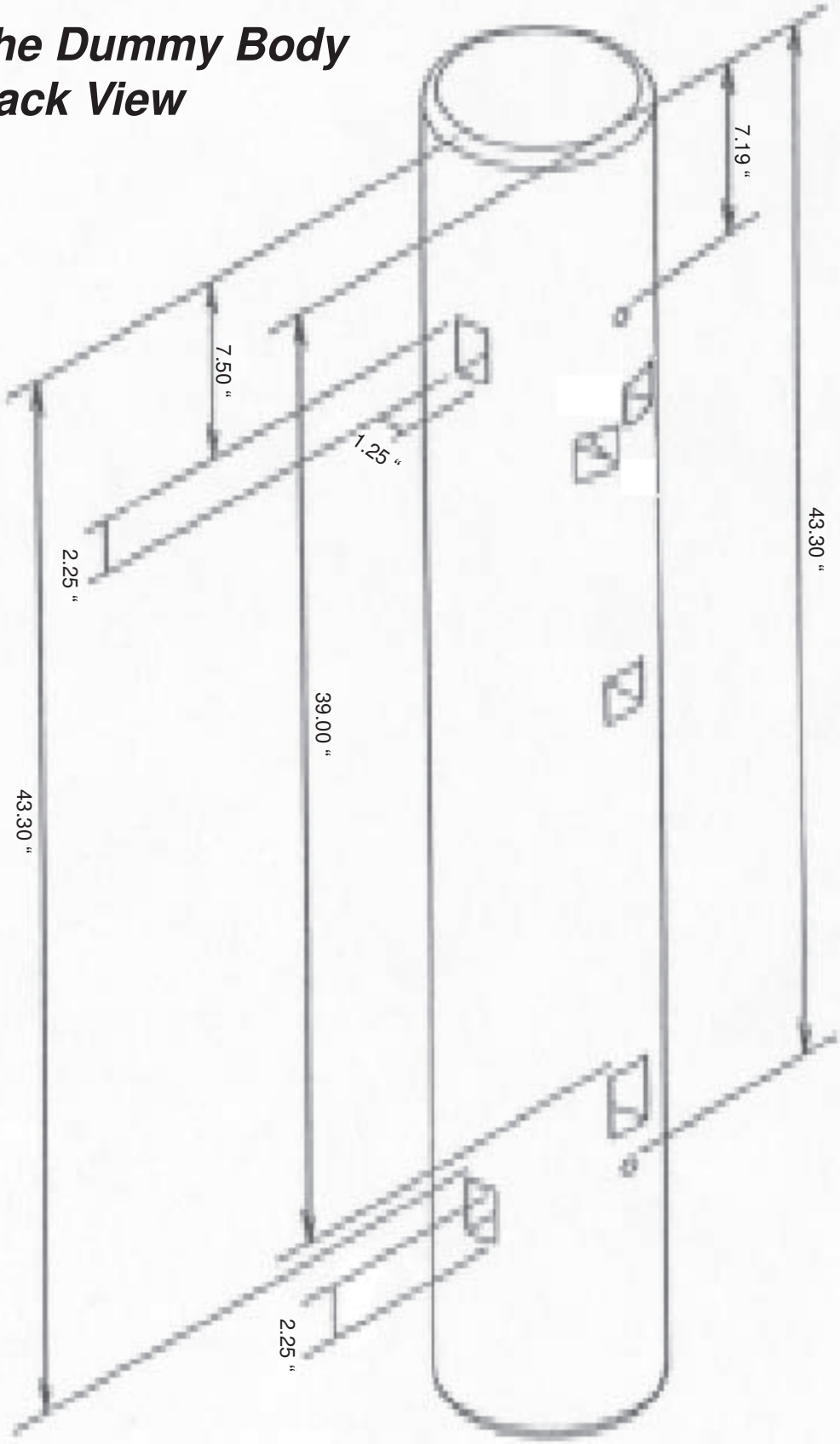

(C) Copyright WCKFC 2001

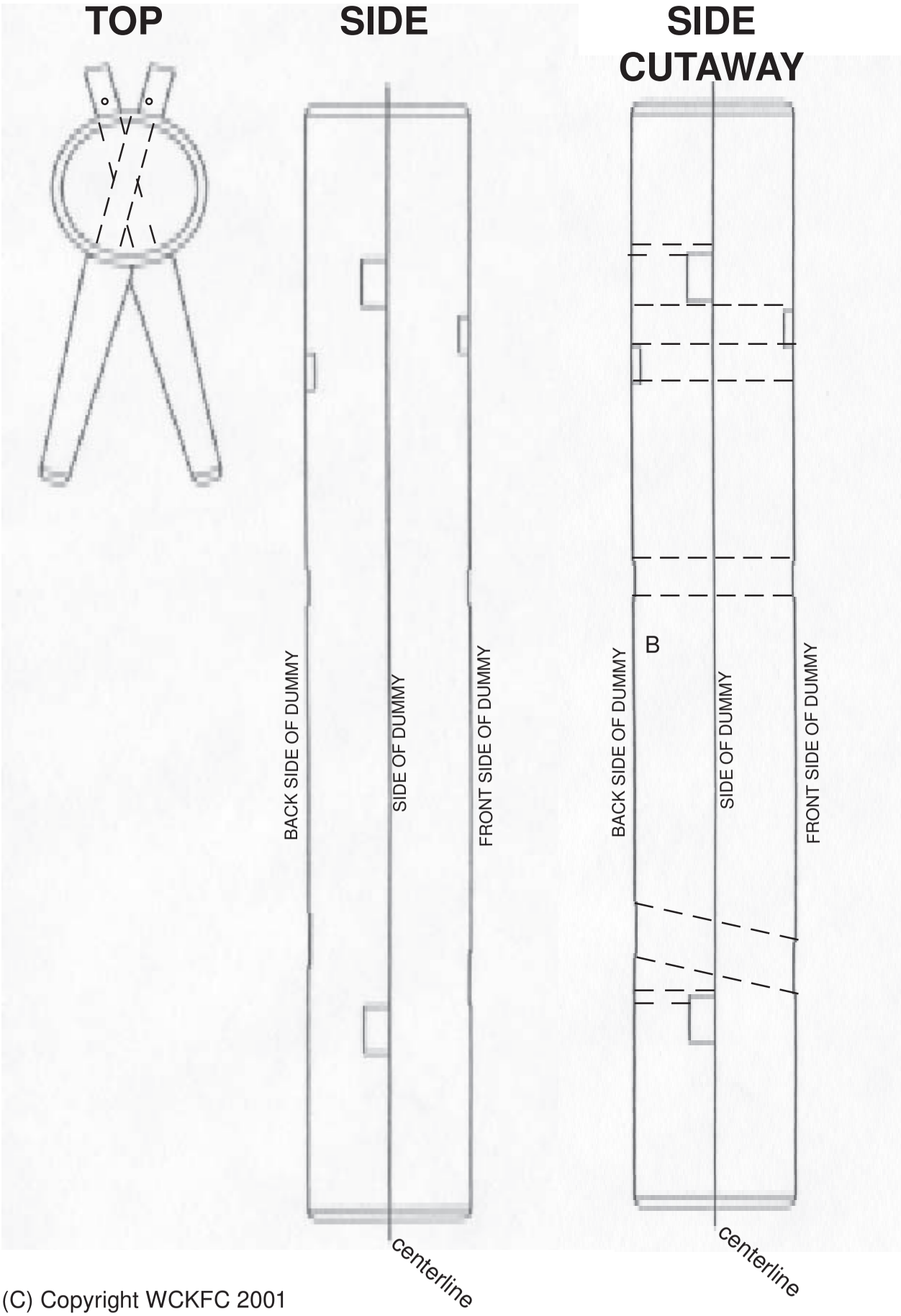

(C) Copyright WCKFC 2001

The Upper Dummy Arms
Make two of them

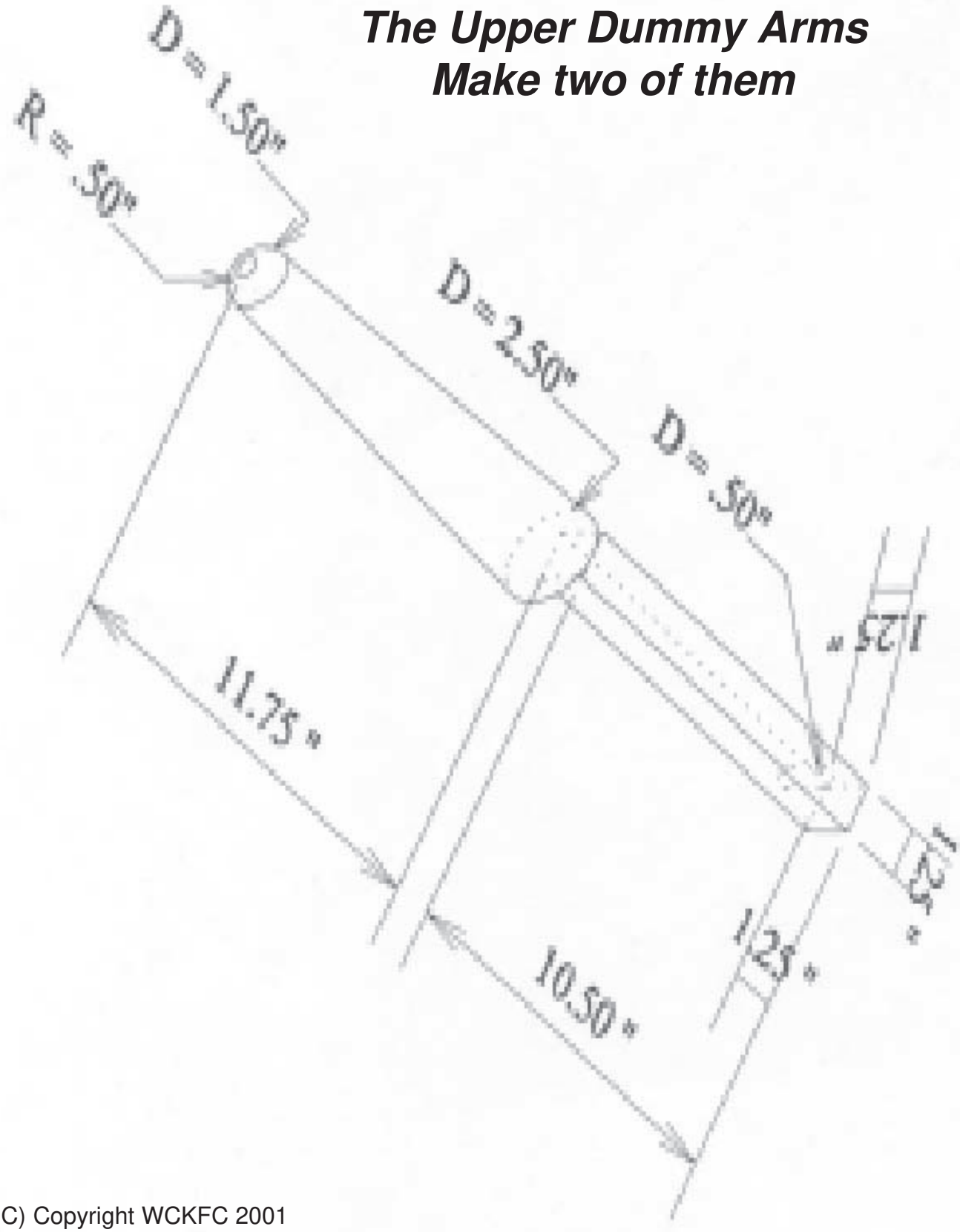

(C) Copyright WCKFC 2001

The Middle Dummy Arm
Make only one

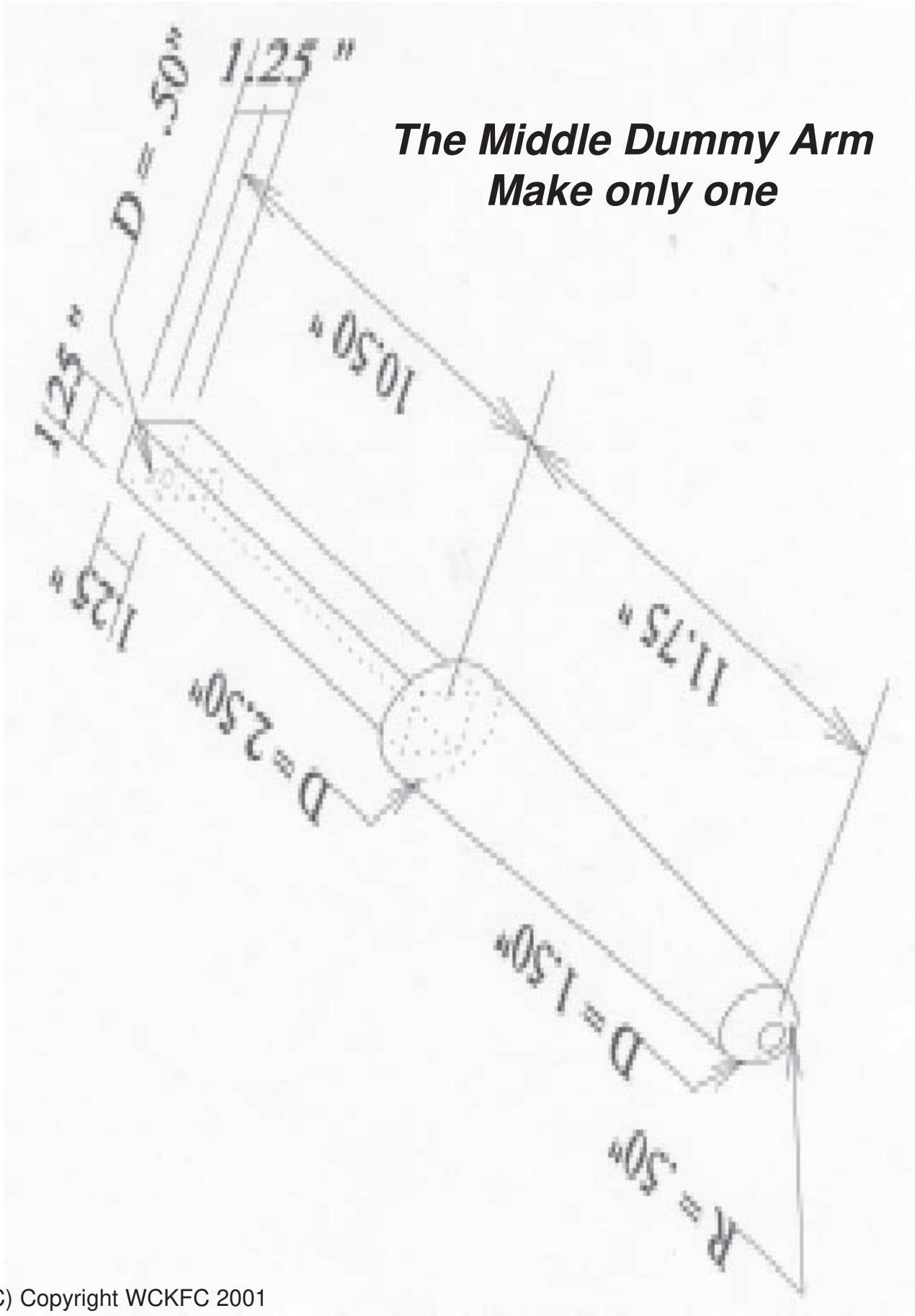

(C) Copyright WCKFC 2001

The Dummy Leg

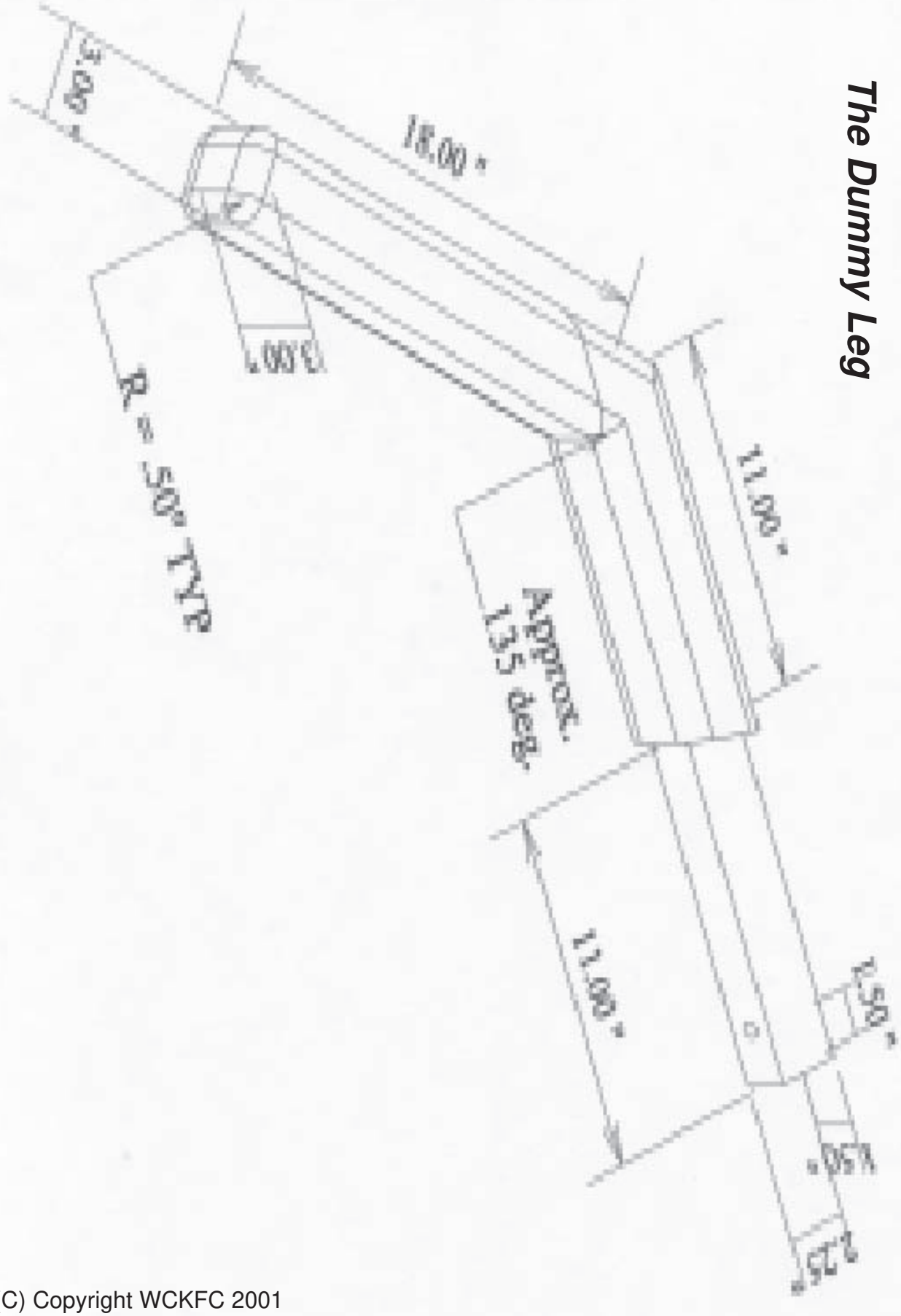

(C) Copyright WCKFC 2001

(C) Copyright WCKFC 2001
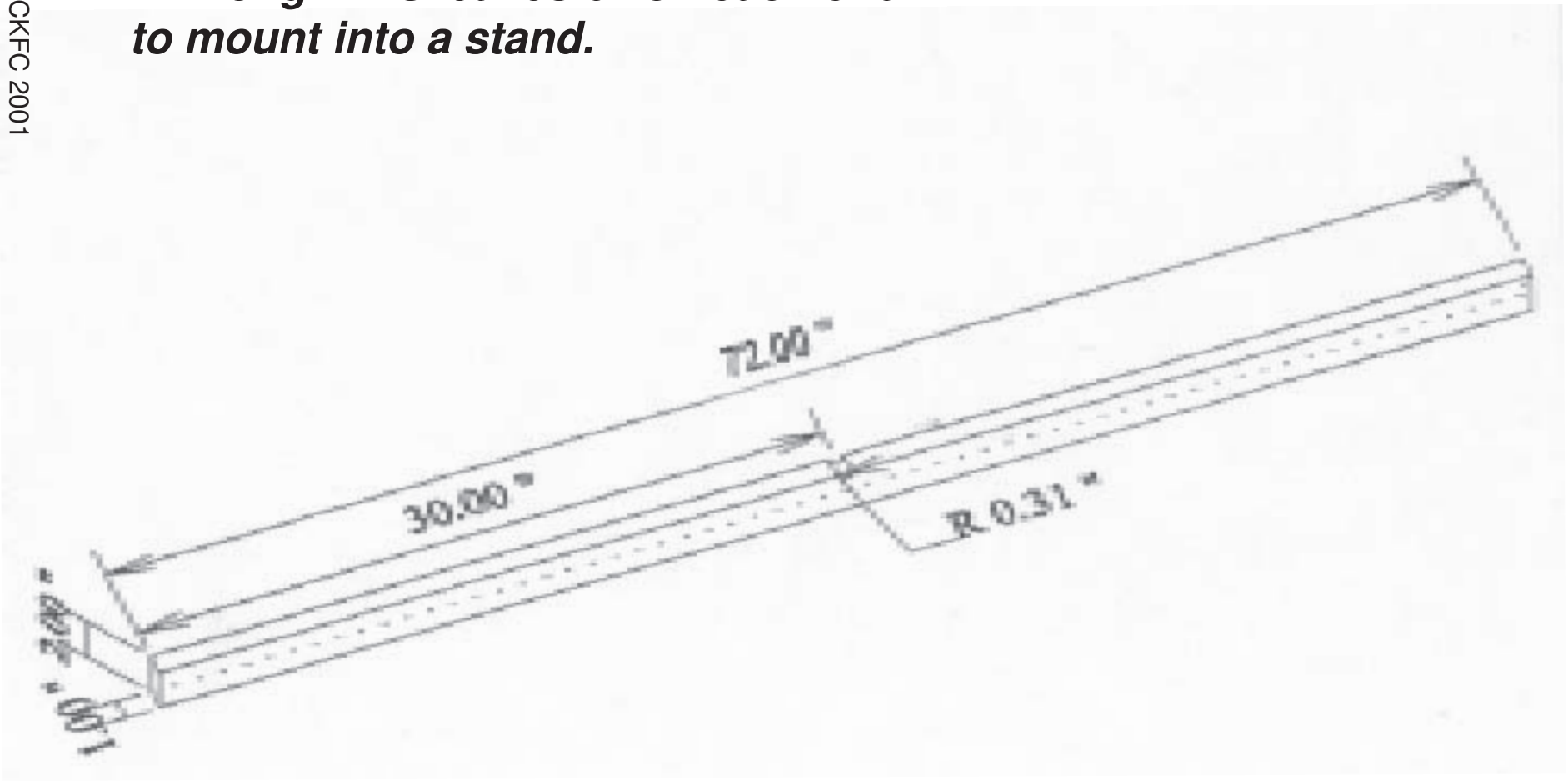
The slats that hold up the dummy. Make two of them out of hardwood. 72” long. This leaves 6” on each end to mount into a stand.